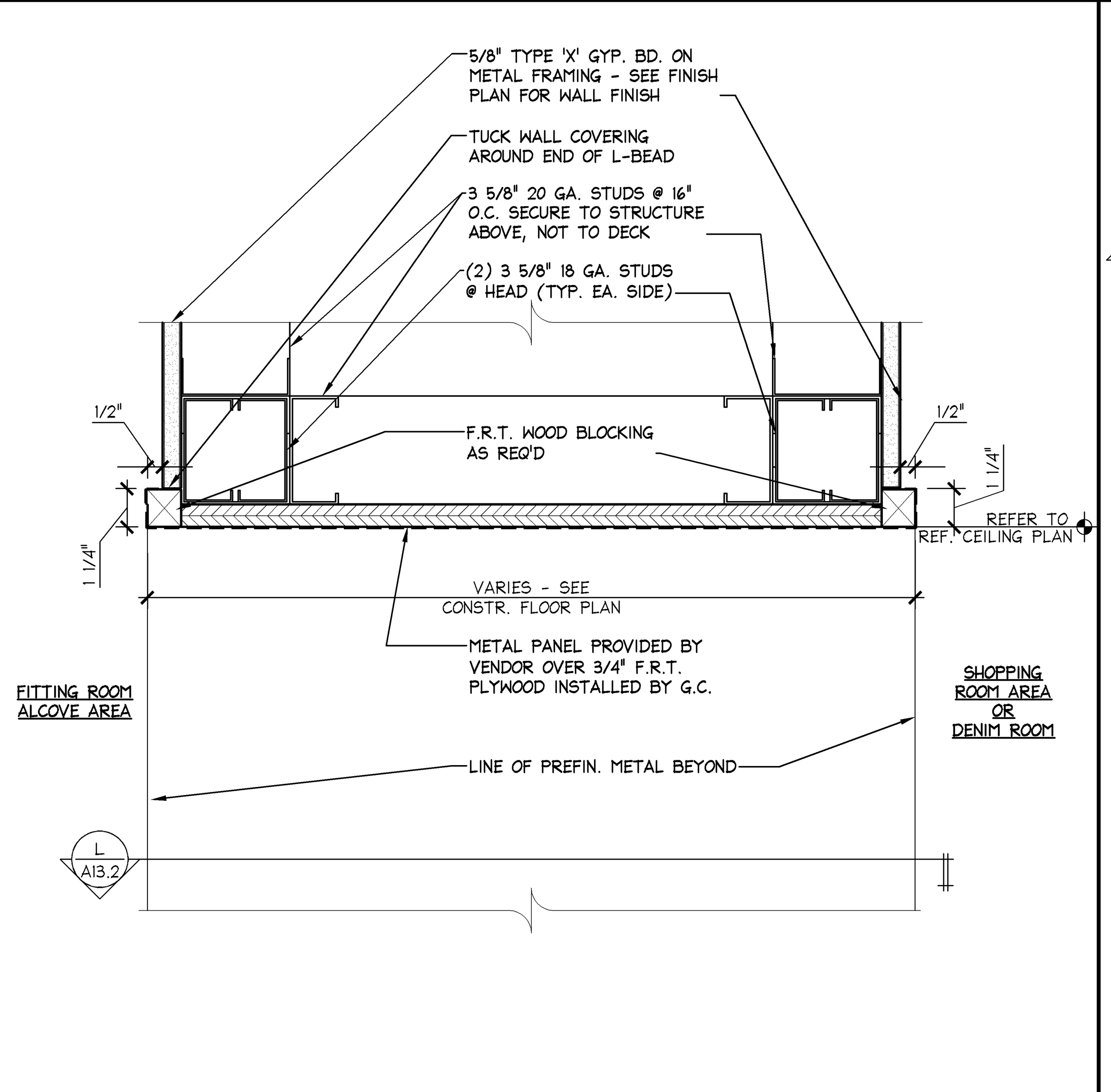

FR ALCOVE PASS THRU HEAD — 3" = 1'-0" — M

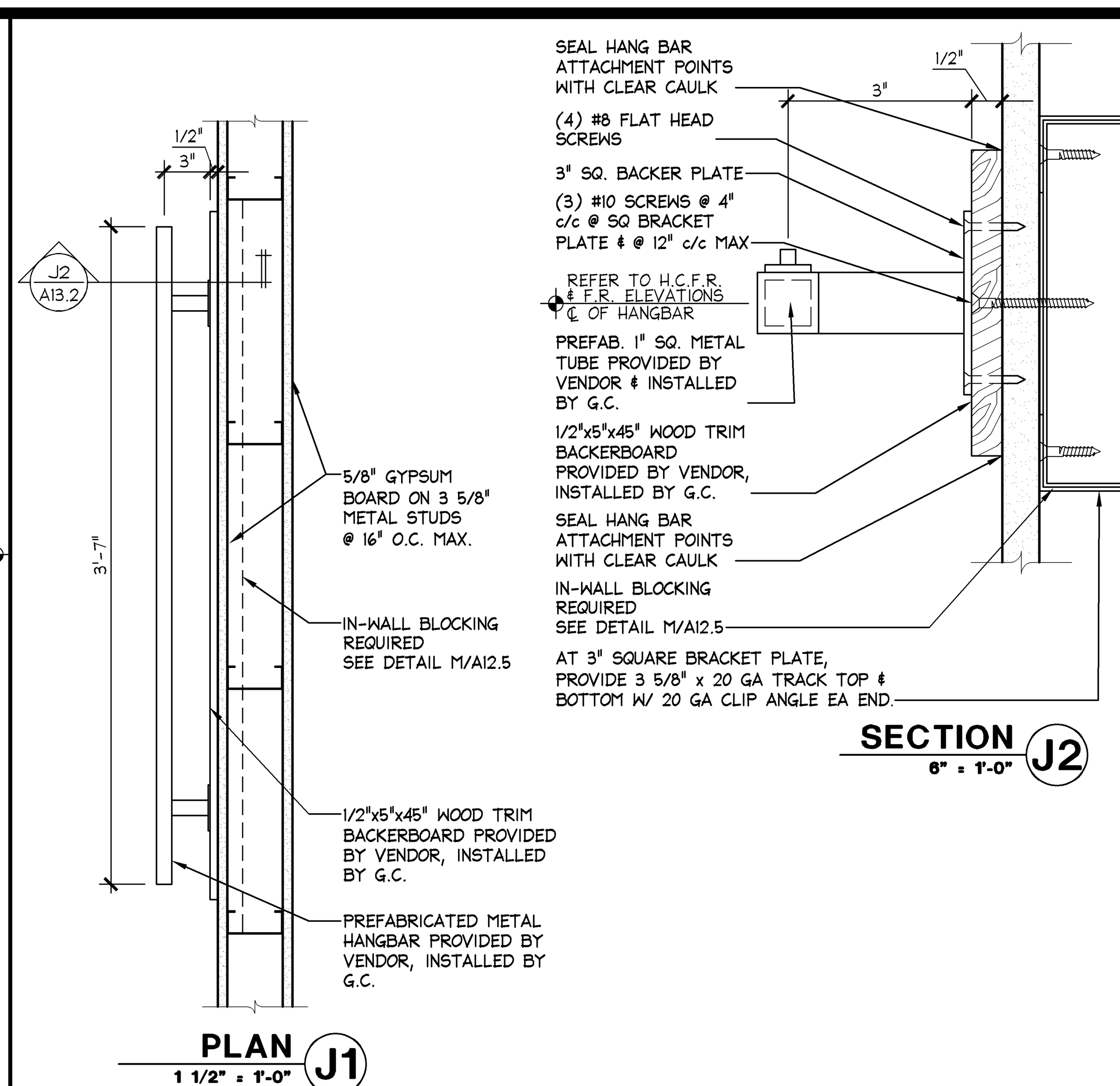

FITTING ROOM HANGBAR — AS NOTED — J

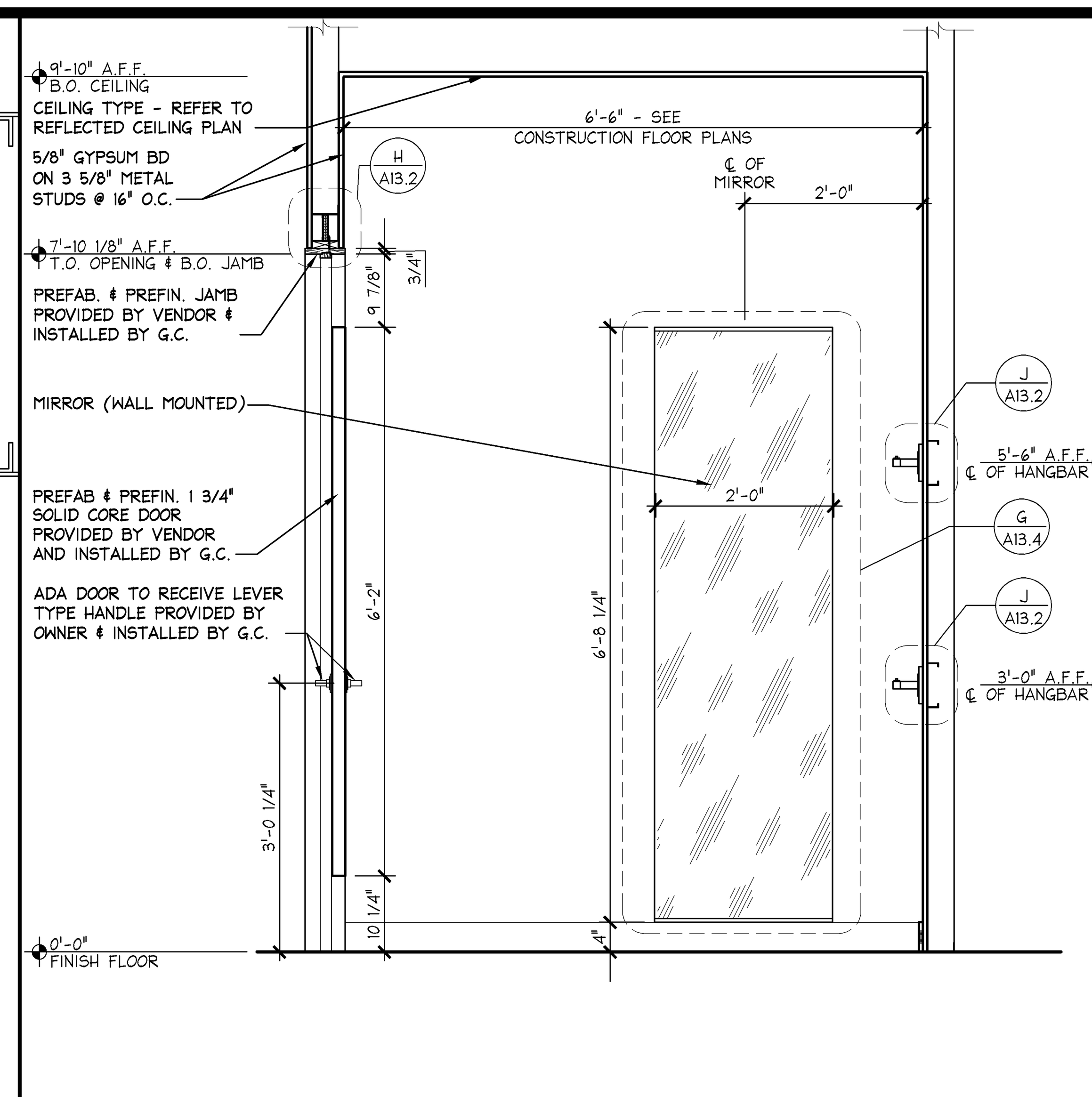

HANDICAP FITTING ROOM SECTION — 3/4"=1'-0" — F

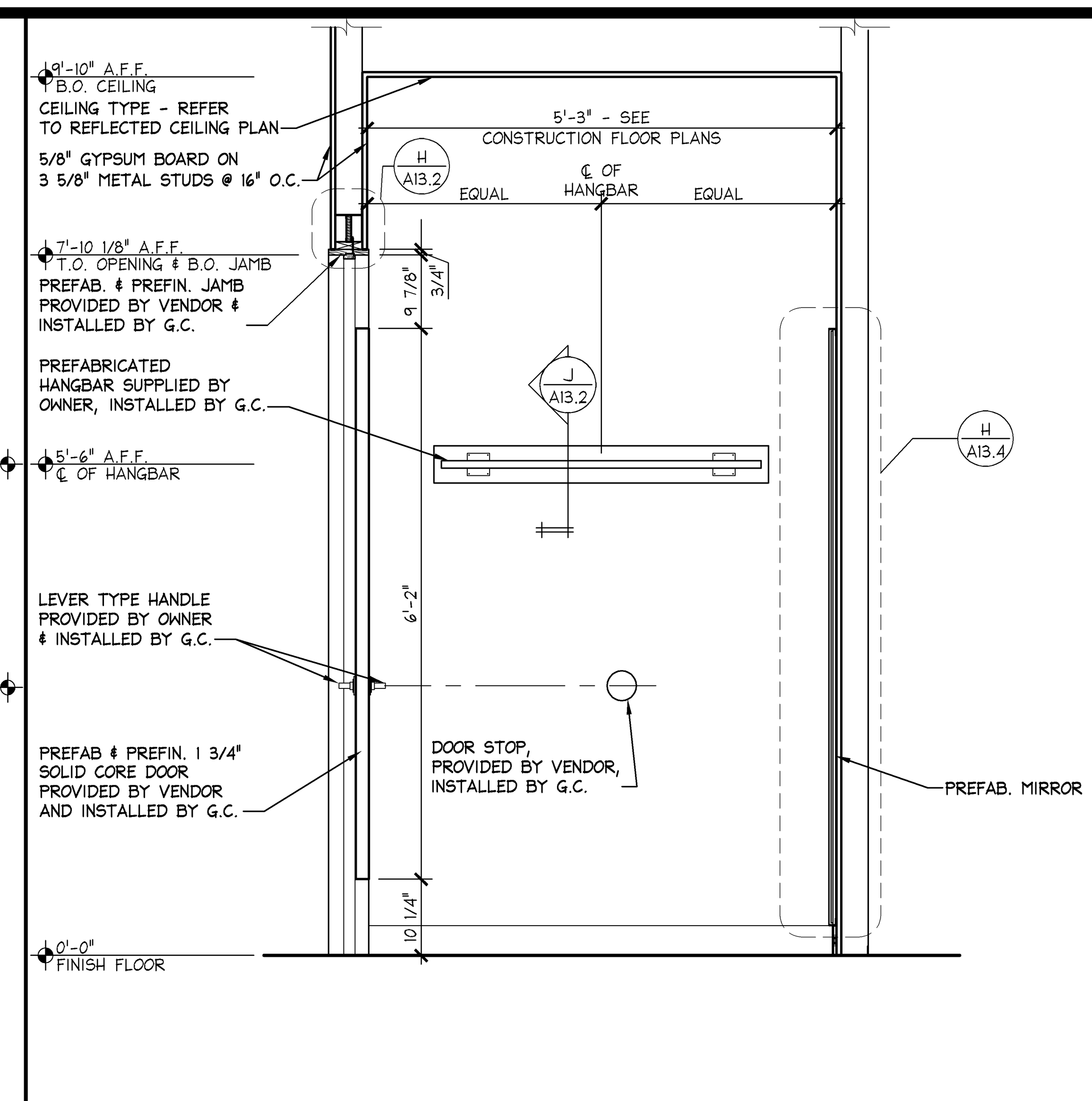

FITTING ROOM SECTION — 3/4"=1'-0" — C

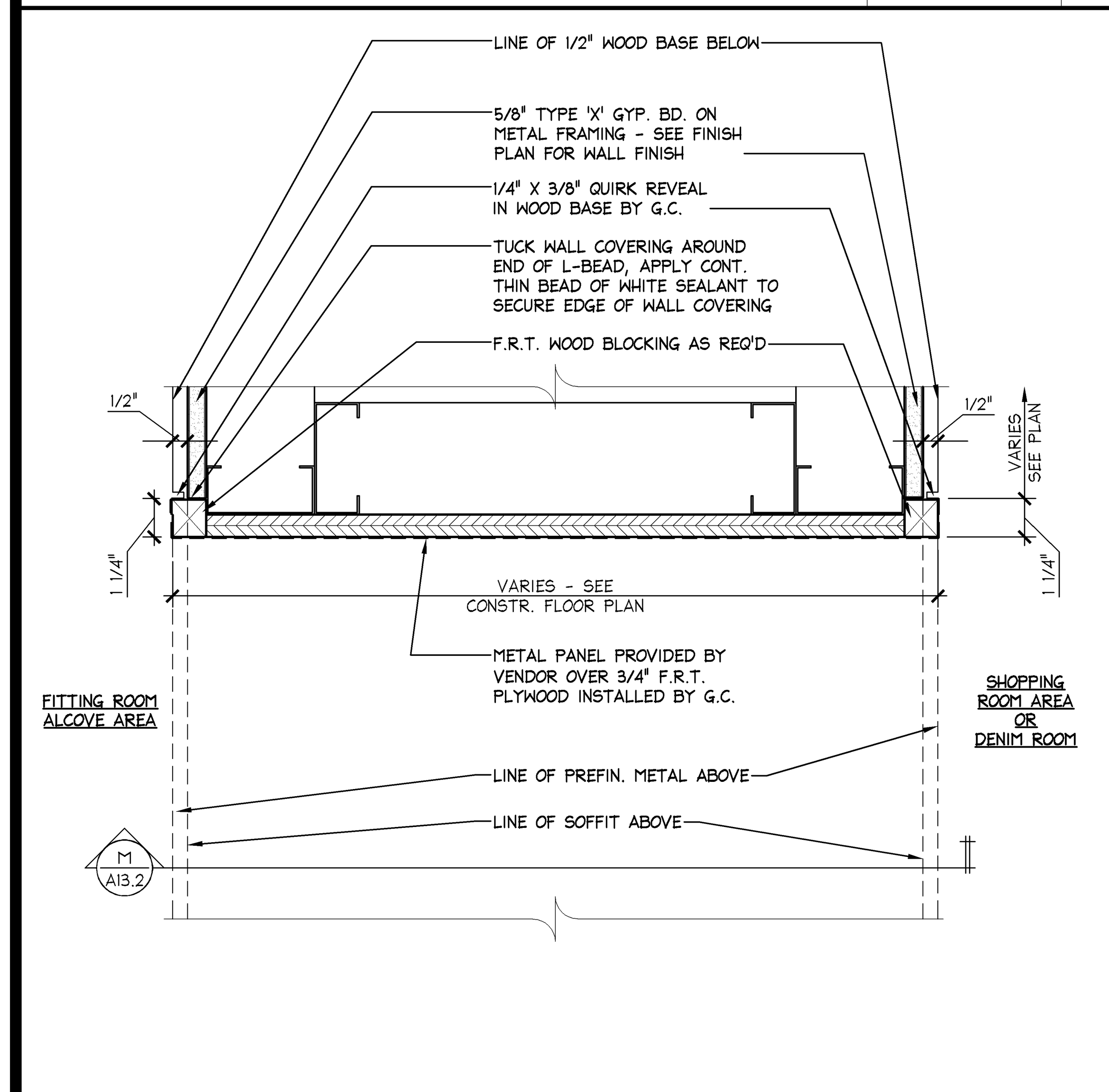

ENLARGED PLAN @ FR ALCOVE PASS THRU — 3"=1'-0" — L

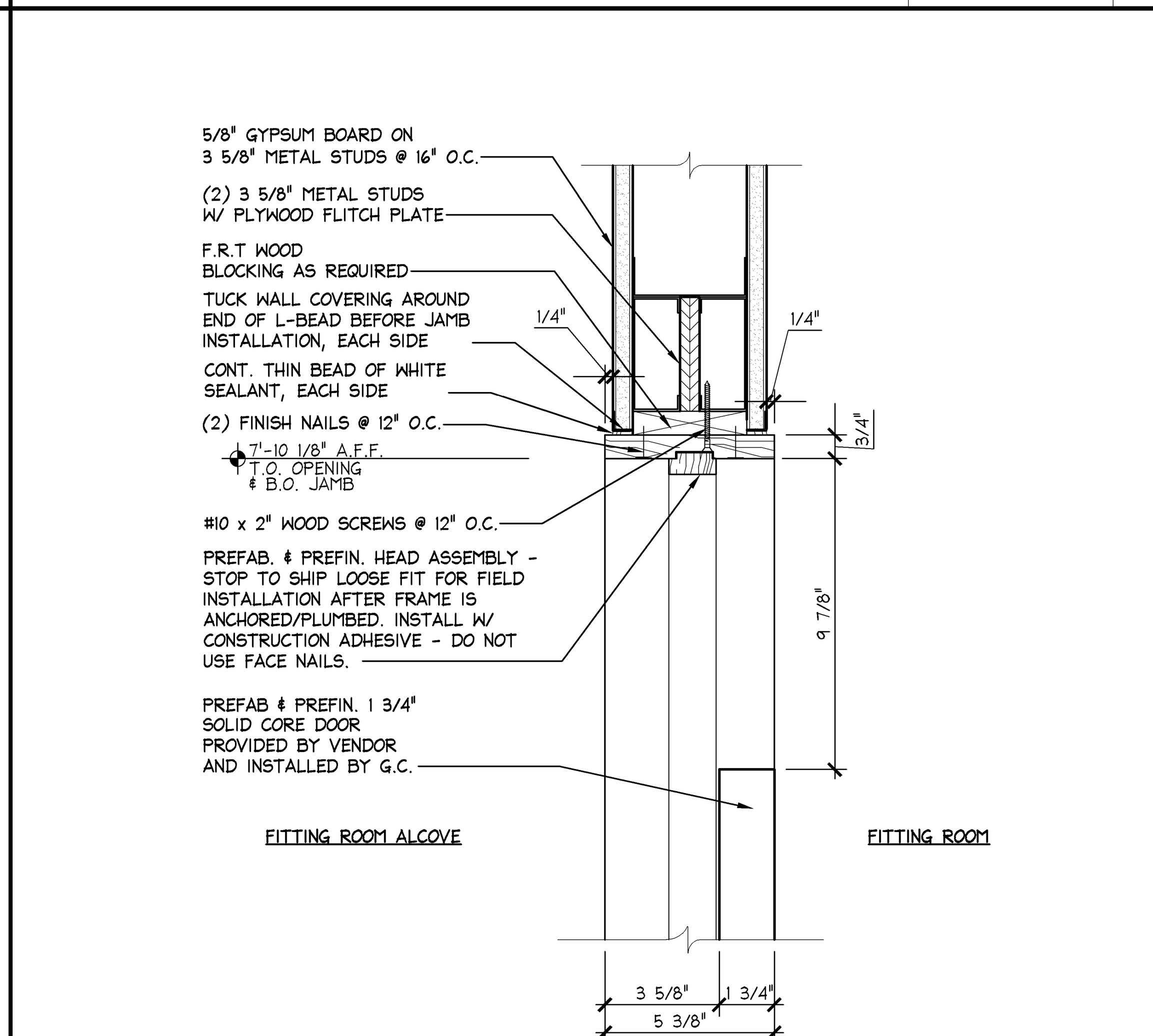

NOTE:
PROVIDE WHITE CAULK AT FRAME PERIMETER AND GYPSUM BOARD

FITTING ROOM DOOR HEAD — 3"=1'-0" — H

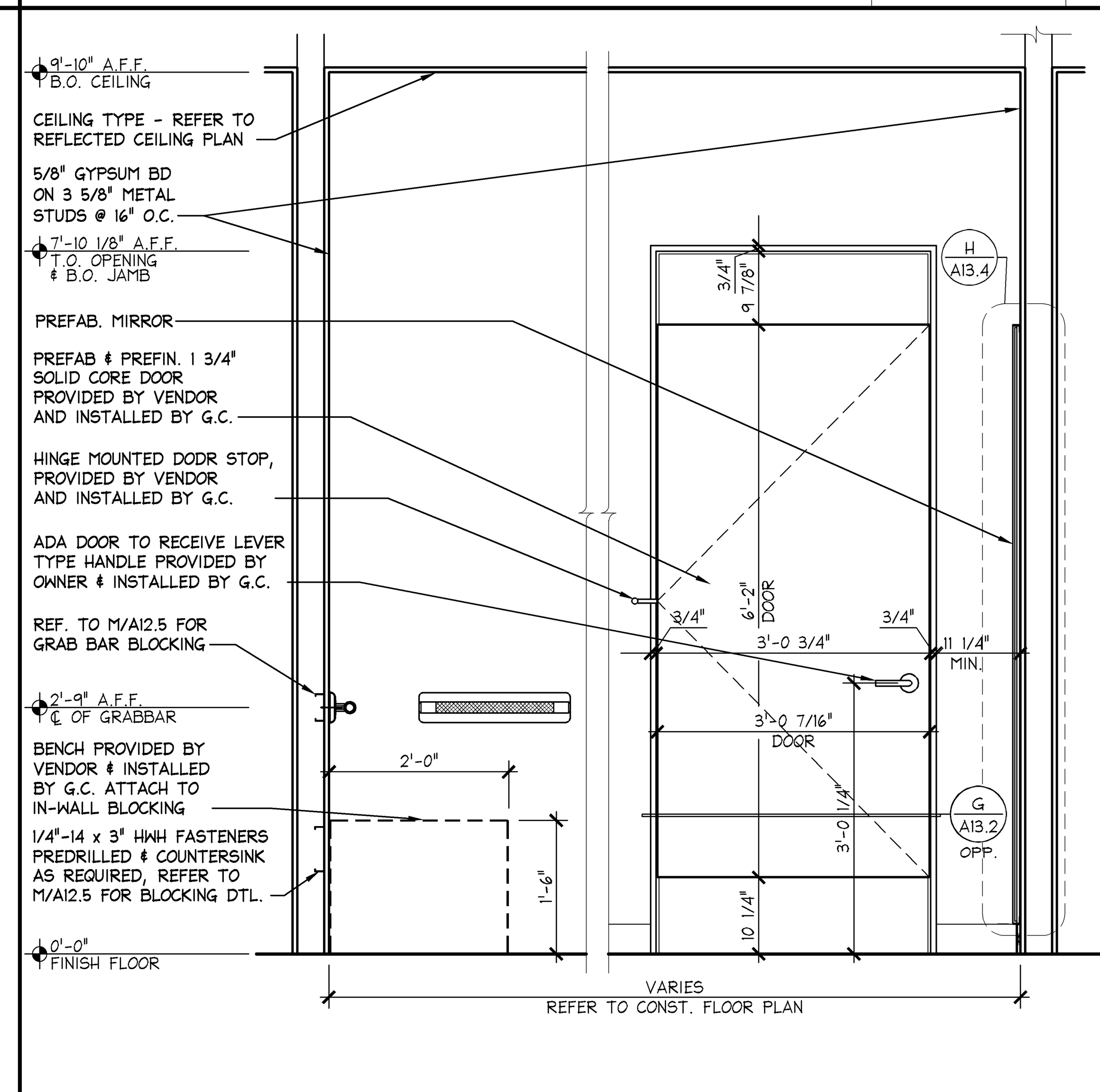

HANDICAP FITTING ROOM SECTION — 3/4"=1'-0" — E

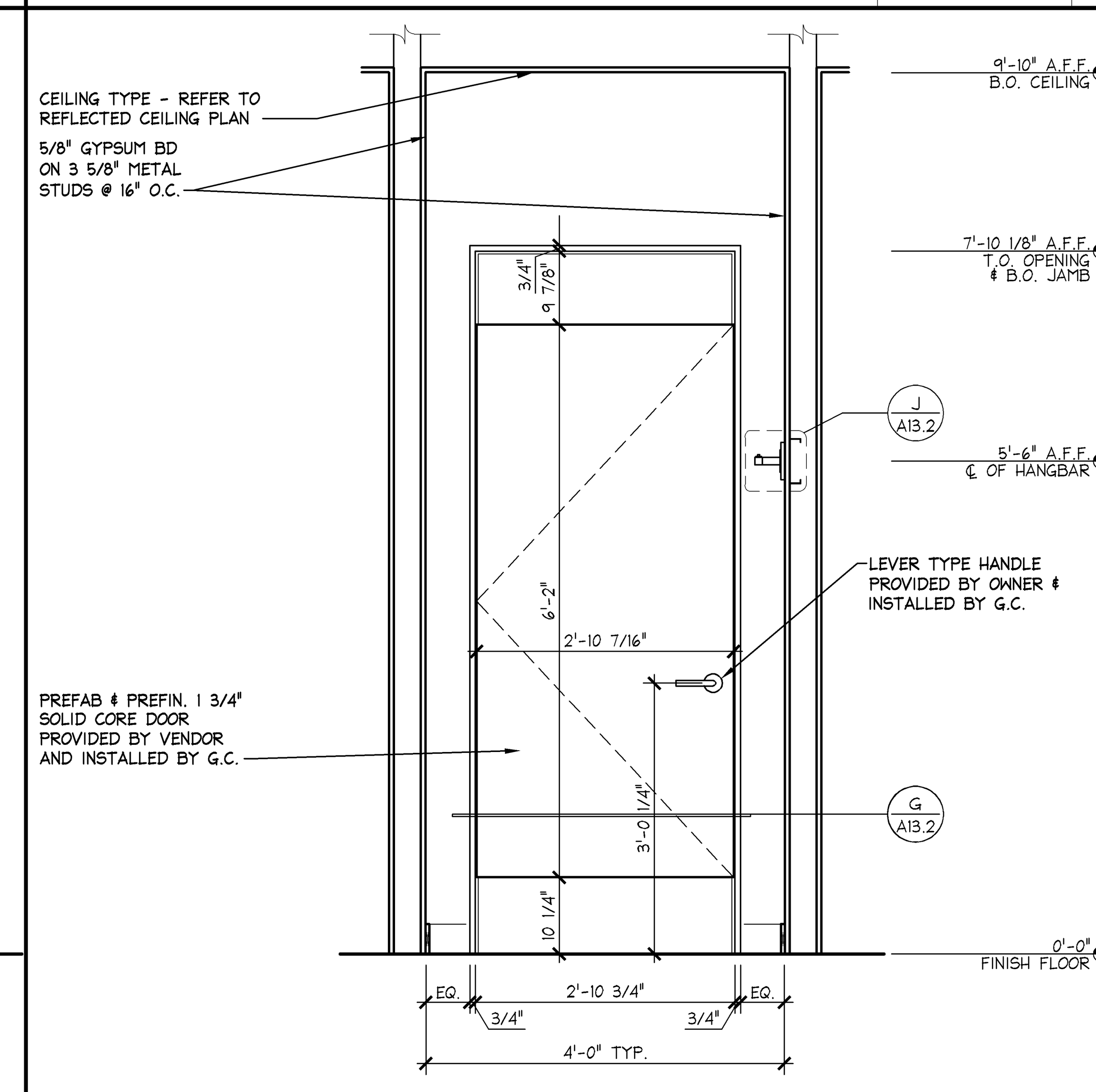

FITTING ROOM SECTION — 3/4"=1'-0" — B

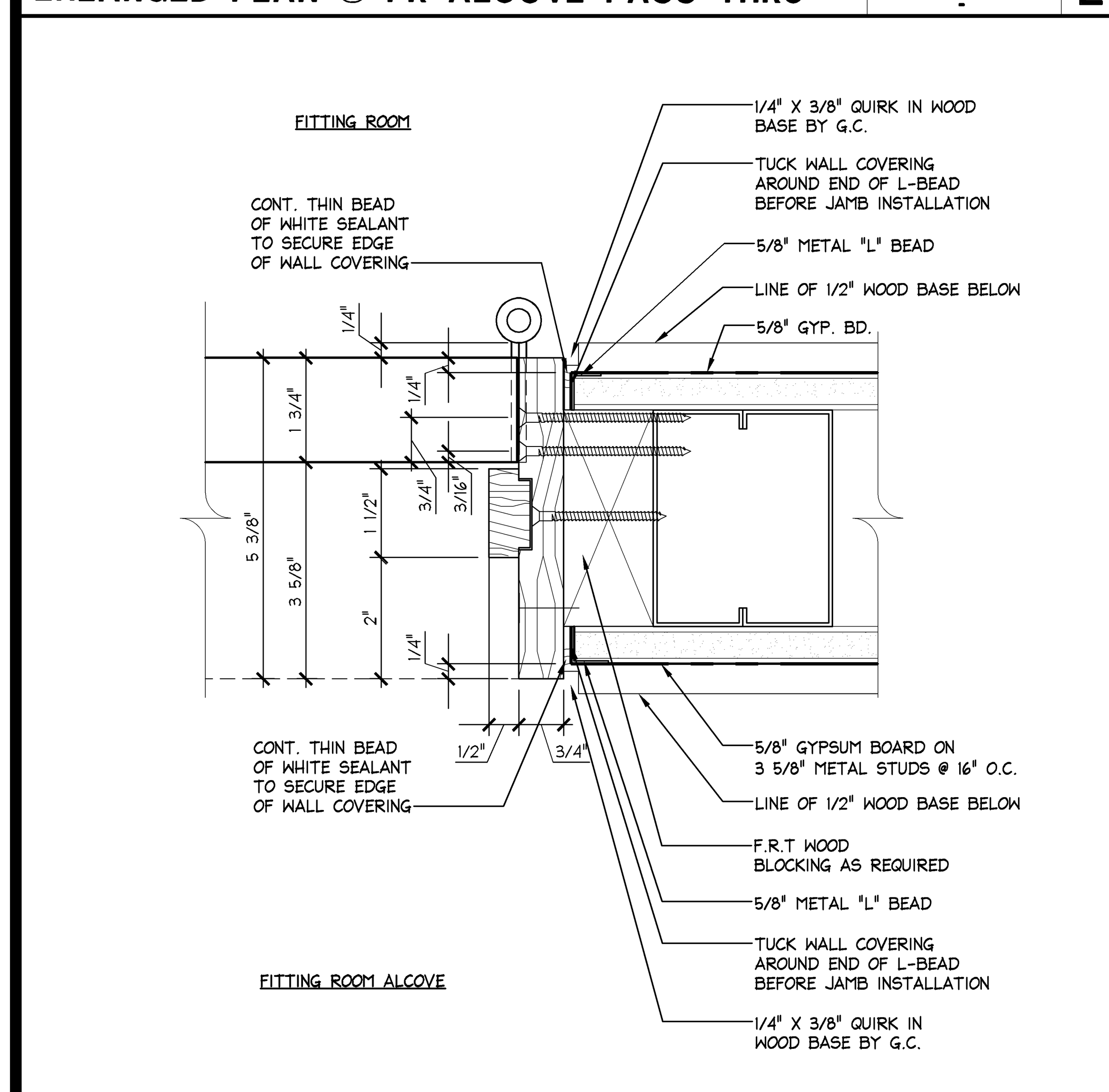

HINGE DETAIL — 6"=1'-0" — K

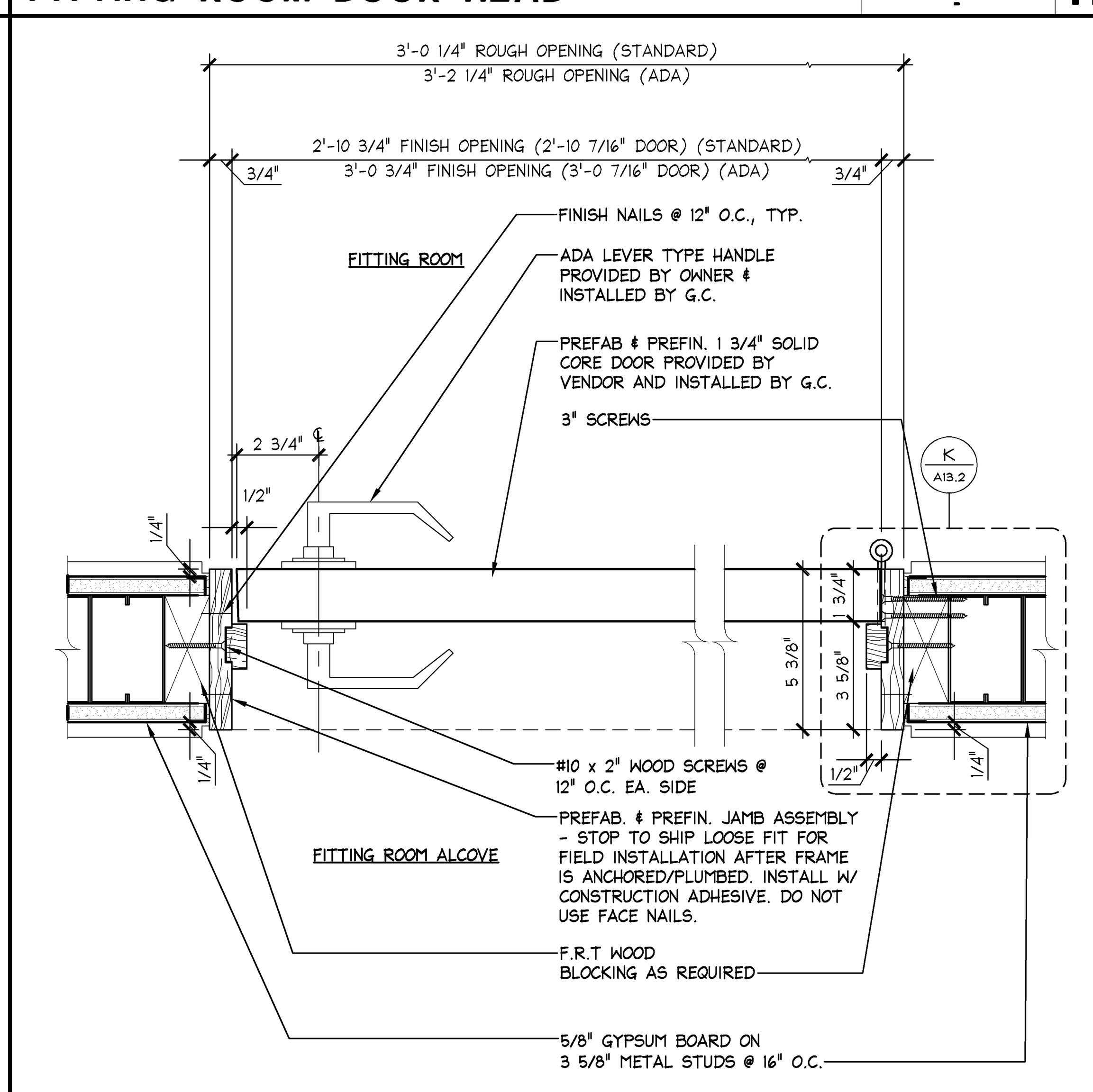

FITTING ROOM DOOR JAMB (STANDARD) — 3"=1'-0" — G

NOTE: G.C. TO APPLY SMALL CONTINUOUS BEAD OF CLEAR SILICONE ON BACK OF DOOR TRIM BEFORE INSTALLING - HOLD BEAD APPROXIMATELY 1/2" IN FROM OUTSIDE EDGE. WIPE OFF ANY EXCESS SILICONE IMMEDIATELY AFTER INSTALLATION (THIS IS ACCOMPLISHED TO PREVENT THE HIDING OF PRICE TAGS)

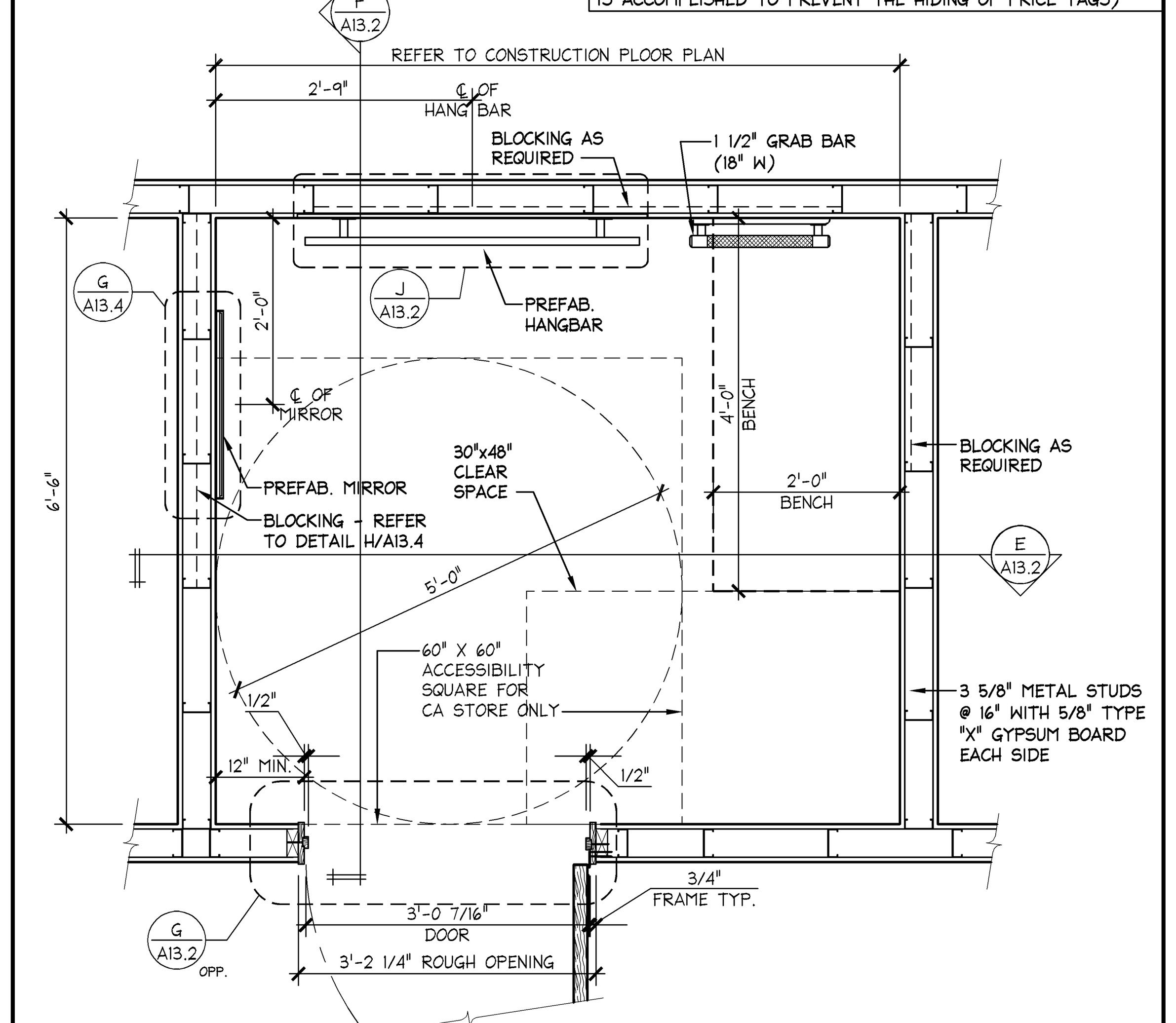

ENLARGED HC FITTING ROOM PLAN (TYP) — 3/4"=1'-0" — D

NOTE: G.C. TO APPLY SMALL CONTINUOUS BEAD OF CLEAR SILICONE ON BACK OF DOOR TRIM BEFORE INSTALLING - HOLD BEAD APPROXIMATELY 1/2" IN FROM OUTSIDE EDGE. WIPE OFF ANY EXCESS SILICONE IMMEDIATELY AFTER INSTALLATION (THIS IS ACCOMPLISHED TO PREVENT THE HIDING OF PRICE TAGS)

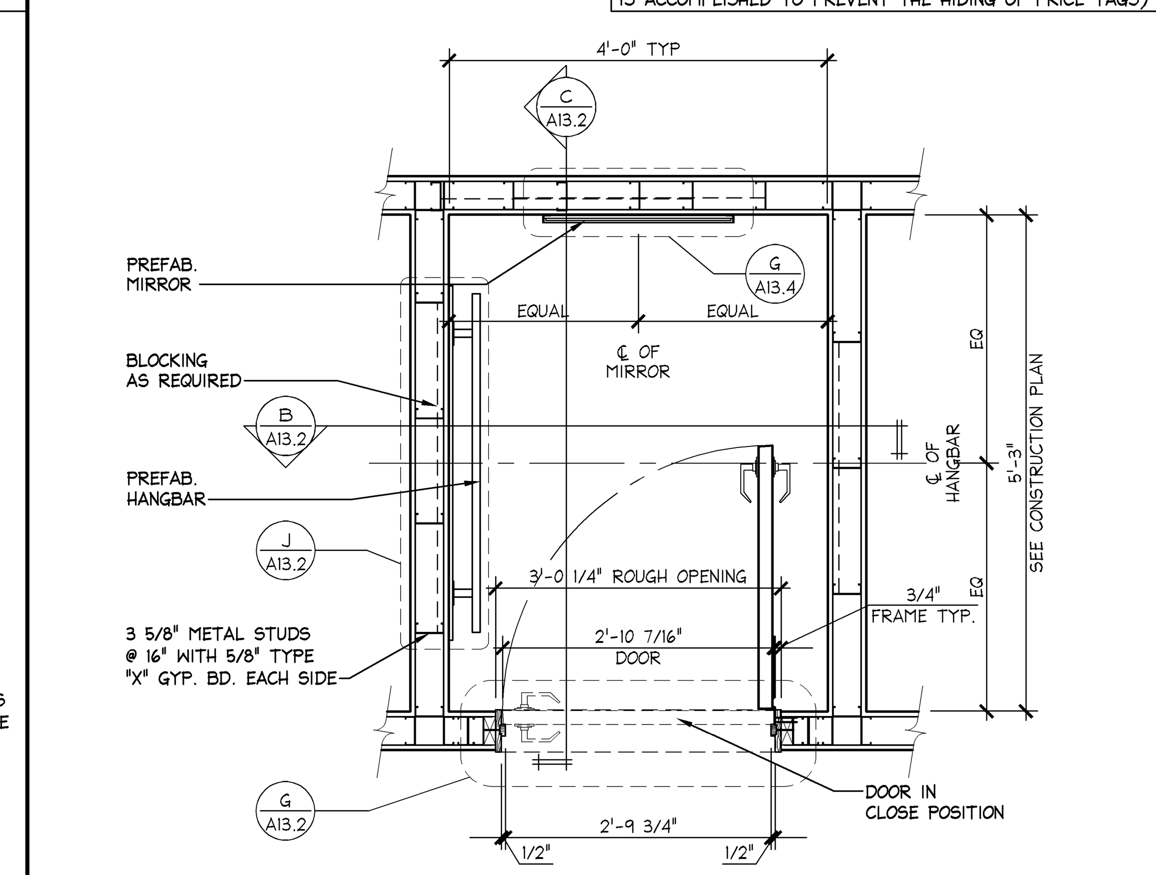

PLANS ARE FOR REFERENCE ONLY

THESE PLANS ARE FOR FIXTURE AND GRAB BAR ILLUSTRATIONS; FOR EXACT ROOM SIZES, CONFIGURATIONS AND DOOR SWINGS - REFER TO THE "CONSTRUCTION PLAN".

ENLARGED FITTING ROOM PLAN (TYP.) — 3/4"=1'-0" — A

EXPRESS

EXPRESS FASHION OPERATIONS, LLC
d/b/a STORE DESIGN & CONSTRUCTION
1 Express Drive Columbus, Ohio 43230
Telephone: 614.474.4001 · Express.com

PROHIBITION ON REUSE:
THESE DRAWINGS AND SPECIFICATIONS WERE PREPARED FOR USE ON A SPECIFIC SITE CONTEMPORANEOUSLY WITH THEIR ISSUE DATE. THEY ARE NOT INTENDED FOR USE ON A DIFFERENT PROJECT SITE OR AT A LATER TIME. REUSE OF THESE DRAWINGS AND SPECIFICATIONS, OR ANY REPRODUCTION THEREOF, ON ANOTHER PROJECT IS PROHIBITED AND CONTRARY TO LAW UNLESS EXPRESSLY AUTHORIZED IN WRITING BY EXPRESS STORE PLANNING, INC., D/B/A EXPRESS STORE DESIGN AND CONSTRUCTION ("ESDC").

THESE DRAWINGS AND SPECIFICATIONS ARE THE PROPERTY OF ESDC AND SHALL NOT BE DISPLAYED IN ANY MANNER OR USED ON ANY OTHER PROJECT EXCEPT BY WRITTEN AGREEMENT WITH ESDC. NO REPRODUCTION OF THESE DRAWINGS AND SPECIFICATIONS SHALL BE MADE WITHOUT THE WRITTEN AUTHORIZATION OF THE ESDC. ALL ORIGINALS OR REPRODUCTIONS OF THESE DRAWINGS AND SPECIFICATIONS MUST BE RETURNED TO ESDC UPON COMPLETION OF THEIR INTENDED USE, UNLESS OTHERWISE AGREED BY THE ESDC.

COPYRIGHT NOTICE:
THESE DRAWINGS AND SPECIFICATIONS ARE COPYRIGHTED AND SUBJECT TO COPYRIGHT PROTECTION AS AN "ARCHITECTURAL WORK" UNDER SEC. 102 OF THE COPYRIGHT ACT, 17 U.S.C. AS AMENDED DECEMBER 1990; KNOWN AS THE ARCHITECTURAL WORKS COPYRIGHT PROTECTION ACT OF 1990. THE PROTECTION INCLUDES, WITHOUT LIMITATION, THE OVERALL FORM, ARRANGEMENT AND COMPOSITION OF SPACES, AND ELEMENTS OF THE DESIGN. UNDER SUCH PROTECTION, UNAUTHORIZED USE OF THESE DRAWINGS AND SPECIFICATIONS MAY RESULT IN CESSATION OF CONSTRUCTION, BUILDING SEIZURE, AND/OR MONETARY LIABILITY.

712

PKG B
FALL 2014
130832

PROJECT INFORMATION:

EXPRESS
SPRINGFIELD TOWN CENTER
6847 SPRINGFIELD MALL
SPACE NO.: 6847
SPRINGFIELD, VA 22150

SCOPE:	NEW
DESIGN TYPE:	DG
ESD&C PROJECT #:	94869
PACKAGE:	
GENERATION:	
A/E PROJECT #:	

REVISIONS:

	REQUIRED BY:	DATE
1*		03/13/14
2*		04/09/14
3*		05/06/14

* INDICATES NO REVISION TO THIS SHEET

SHREMSHOCK
Shremshock Architects, Inc.
6130 S. Sunbury Rd. Westerville, OH 43081
t: 614 545 4550 | f: 614 545 4555 | shremshock.com
Gerald S. Shremshock, Architect
Timothy J. Shremshock, Architect

ELITE CONSTRUCTION GROUP
LAKE JACKSON, TX
PHONE: 979-285-0712
NOTE: THESE PRINTS HAVE BEEN REDUCED BY 50 PERCENT. SCALE WILL BE 50 PERCENT OF WHAT IS NOTED ON PLANS

DATE ISSUED:	02/14/2014
DESIGNED BY:	JB
DRAWN BY:	AEM
CHECKED BY:	KMM

FITTING ROOM (TYPICAL)

DRAWING NUMBER:
A13.2